JASON HYDROTHERAPY
8328 MacArthur Dr. • North Little Rock, AR 72118
501.771.4477 • Fax: 501.771.2333
Customer Service: 800.255.5766
www.jasoninternational.com

Designer Collection Specifications

Air-Whirlpool - EM553

Blower must be remote mounted on Air-Whirlpool baths with SK66 skirt.

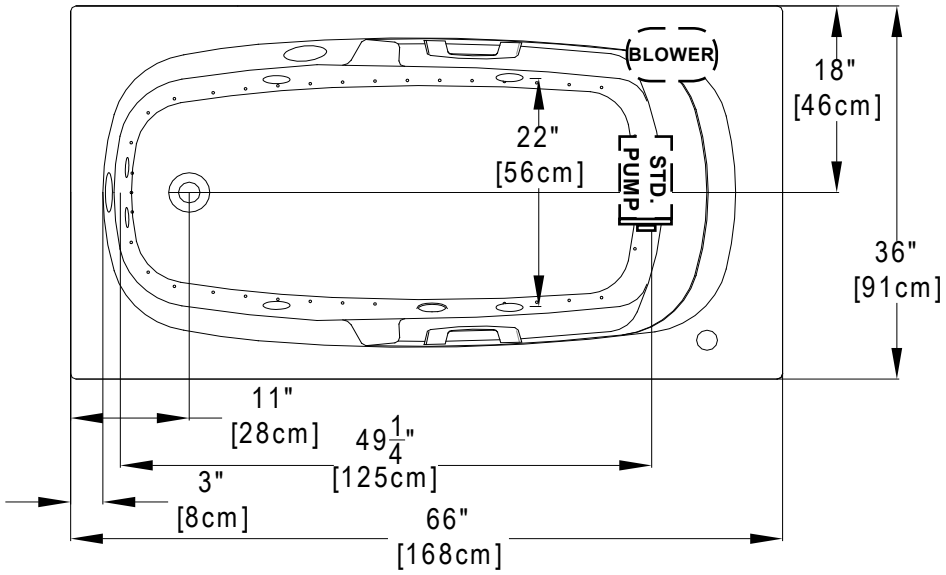

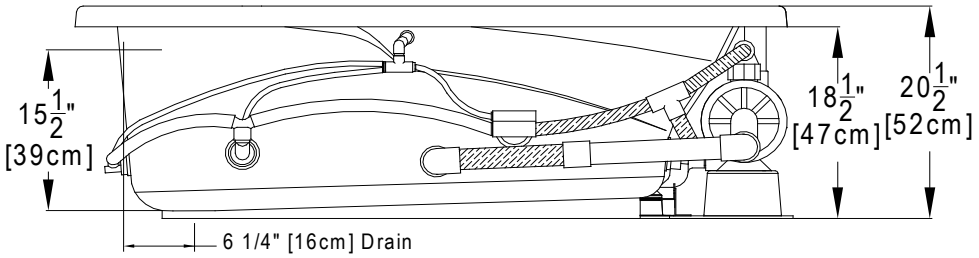

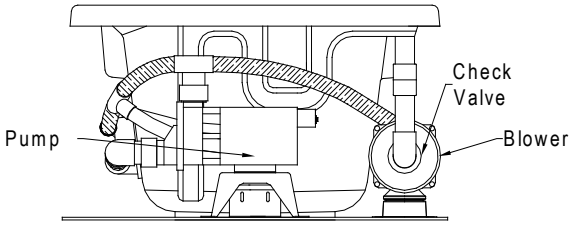

Patents recieved or pending.

Note: Dimensional Tolerances: ±1/4"

Drop-in-Hole Size:	64" x 34"
Operating Capacity:	39 Gal.
Overflow Capacity:	61 Gal.
Floor Loading / sq.ft.:	48.5 lbs.
Carton Weight:	165 lbs.
Cube:	34.3 ft.^{3}

Construction: Fiberglass reinforced acrylic bath with Level Form™ full-support base.

We provide products listed with Intertek ETL SEMKO (Edison Testing Laboratories) U.S. and Canadian and with International Association of Plumbing and Mechanical Officials (IAPMO). Consult factory with your listing requirements.

Standard

A 120v system that includes a quiet 1 1/2 HP, 1-speed pump, and a 1 HP variable speed air blower with integral air heater and automatic purge cycle. Control keypad operates blower and blower speed for Continuous, Pulse, or Wave massage modes, pump, 20-minute timer and the optional LED Chromatherapy mood light. Requires (1) 15A and (1) 20A, 120v circuit. If optional heater is added, then (1) 15A and (1) 30A, 120v circuit is required.

Signature

A 240v system that includes a quiet 1 1/2 HP, 3-speed pump; 1 HP variable speed air blower with integral air heater, a front access LED Chromatherapy mood light, a 1.5 kw heater, digital control keypad with LCD display window, Automatic Ozone System, low water level and water temperature sensors, 20-minute timer and an automatic purge cycle. Control keypad also operates the 3-speed pump, LED Chromatherapy light, air blower, blower speed, Continuous, Pulse, or Wave massage modes and the optional jetted neck pillow. Shows water temperature, time remaining and pump/blower speeds. Includes a floating Universal Remote Control that operates all functions of the whirlpool pump, air blower, and LED Chromatherapy mood light plus TV, DVD, CD, etc. Requires (1) 20A, 240v circuit.